M8 male 90° / M8 female 90° A-cod. snap-in

PUR 3x0.25 ye UL/CSA+robot+drag ch. 2m

Male 90° – female 90°
M8 (Snap In) – M8 (Snap In), 3-pole
Further cable lengths on request.
Plastic housings with good resistance against chemicals and oils.
The resistance to aggressive media should be individually tested for your application. Further details on request.

Link to Product

Illustration

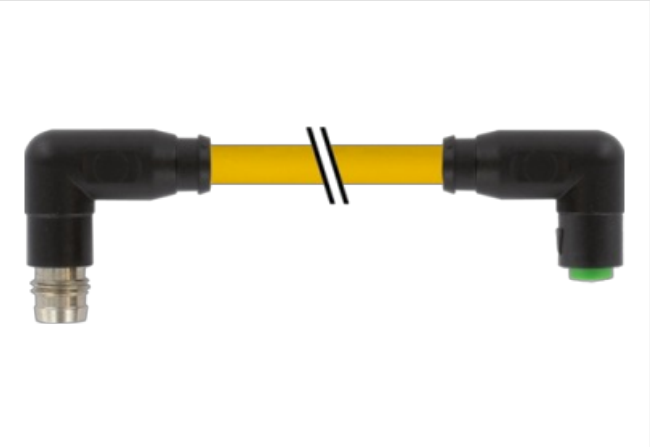

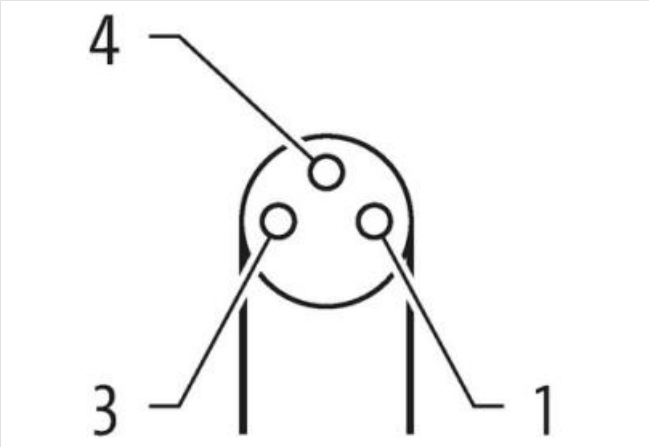

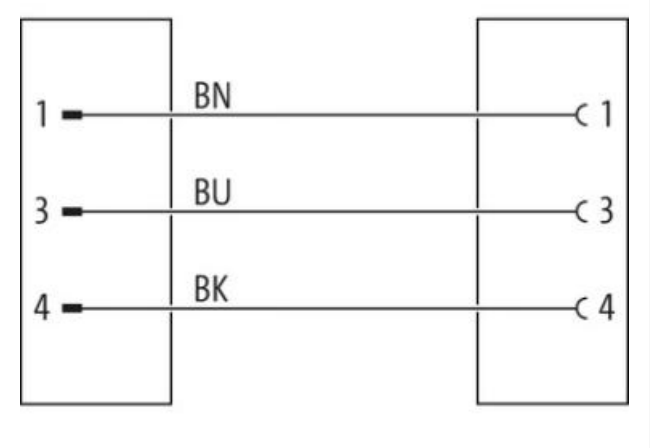

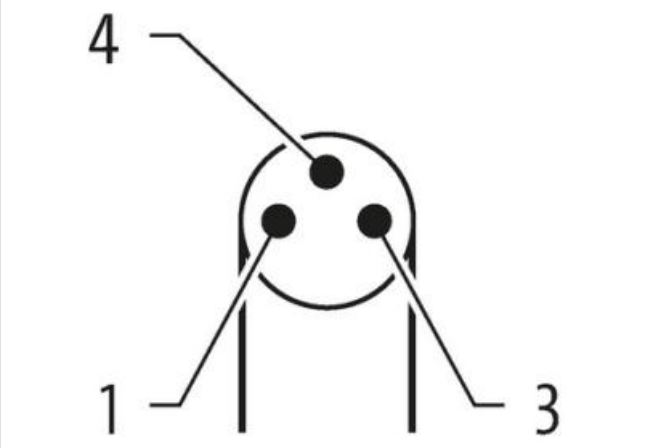

このデータシートに含まれる情報は最大限の注意を払って作成されました。
Liability for the correctness completeness and topicality of the information is restricted to gross negligence. Version: 2024-04-20

MURR ELEKTRONIK
stay connected

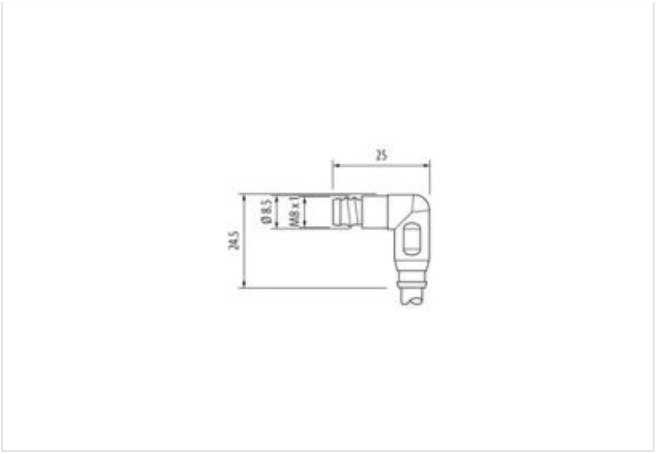

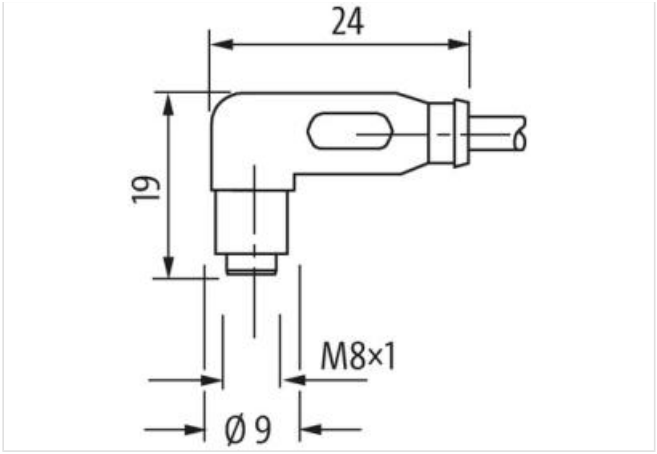

Product may differ from Image

Cable length	2 m
Side 1	
Thread	M8
suitable for corrugated tube (internal Ø)	6,5 mm
Electrical data | Supply	
Operating voltage AC max.	50 V
Operating voltage DC max.	60 V
Operating voltage AC (UL-listed)	30 V
Operating voltage DC (UL-listed)	30 V
Current operating per contact max.	4 A
Device protection | Electrical	
Degree of protection (EN IEC 60529)	IP65
Additional condition protection degree	inserted, locked
Pollution Degree	3
Rated surge voltage	1,5 kV
Material group (IEC 60664-1)	I
Mechanical data | Material data	
Material housing	PUR
Mechanical data | Mounting data	
Looking techniques	Snap In
Environmental characteristics | Climatic	
Operating temperature min.	-25 °C
Operating temperature max.	85 °C
Additional condition temperature range	depending on cable quality
Conformity	
Product standard	DIN EN 61076-2-114 (M8)
Installation | Cable	
Cable identification	050
Cable Type	5
Jacket Color	yellow

このデータシートに含まれる情報は最大限の注意を払って作成されました。
Liability for the correctness completeness and topicality of the information is restricted to gross negligence. Version: 2024-04-20

MURR ELEKTRONIK
stay connected

Type of Certificate	cURus
Amount stranding	1
Stranding	3 wires twisted
wire arrangement	brown, black, blue
No. of bending cycles (C-track)	10 Mio. @ 25 °C
Cable weigth	26,4 g/m
Material jacket	PUR
Shore hardness jacket	58 ± 3 Shore D
Freedom from ingredients (jacket)	lead-free, cadmium-free, CFC-free, halogen-free, silicone-free
Outer-diameter (jacket)	4,3 mm
Tolerance outer diameter (sheath)	± 5 %
Material wire insulation	PP
Amount wires	3
Outer diameter insulation	1,25 mm
Outer diameter tolerance core insulation	± 5 %
Shore hardness wire insulation	74 ± 3 Shore D
Ingredient freeness wire insulation	lead-free, cadmium-free, CFC-free, halogen-free, silicone-free
Amount strands (wire)	32
Diameter of single wires	0,1 mm
Conductor crosssection (wire)	0,25 mm²
Material conductor wire	Stranded copper wire, bare
Conductor type (wire)	strand class 6
Traversing distance (C-track)	5 m @ 25 °C | horizontal
Current load capacity (standard)	to DIN VDE 0298-4
Current load capacity min. wire	4,5 A
Electrical resistance line constant wire	79 Ω/km @ 20 °C
Nominal voltage power AC max.	300 V
Power frequency withstand voltage power (wire - jacket)	2,5 kV @ 60 s
AC withstand voltage power (wire - wire)	2,5 kV @ 60 s
Min. operating temperature (static)	-40 °C
Max. operating temperature (fixed)	80 °C / 90 °C @ 10000 h Operation
Operating temperature min. (dynamic)	-25 °C
Operating temperature max. (dynamic)	80 °C / 90 °C @ 10000 h Operation
Flame resistance	UL 1581 § 1090 | UL 1581 § 1100 FT2 | IEC 60332-2-2
chemical resistance	Good, application-related testing
Gasoline resistance	Good, application-related testing
Oil resistance	DIN EN 60811-404 | Good, application-related testing
Bending radius (fixed)	5 x Outer diameter
Bending radius (dynamic)	10 x Outer diameter
No. of torsion cycles	1 Mio.
Torsion speed	35 cycles/min
Torsion stress	± 360 °/m

取引条件

HSコード	85444290
Packaging unit	1

このデータシートに含まれる情報は最大限の注意を払って作成されました。
Liability for the correctness completeness and topicality of the information is restricted to gross negligence. Version: 2024-04-20