MURR ELEKTRONIK
stay connected

M12 male 0° B-cod. with cable shielded

PUR 1x2xAWG24 shielded vt UL/CSA+drag ch. 8.5m

PROFIBUS
Male straight
M12, 2-pole
B-coded
shielded
Plastic housings with good resistance against chemicals and oils.
The resistance to aggressive media should be individually tested for your application. Further details on request.
Further cable lengths on request.

Link to Product

Illustration

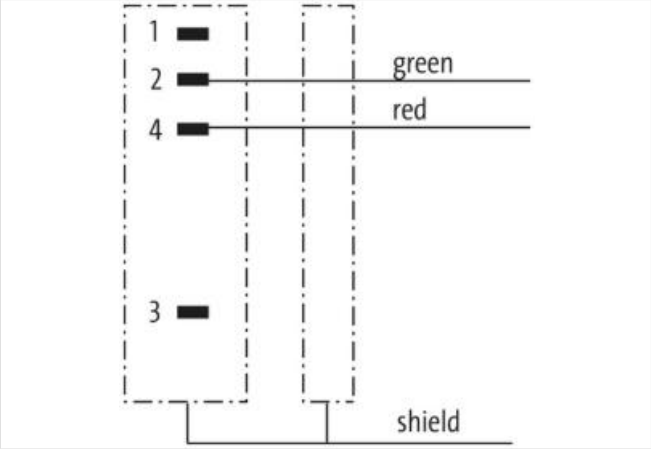

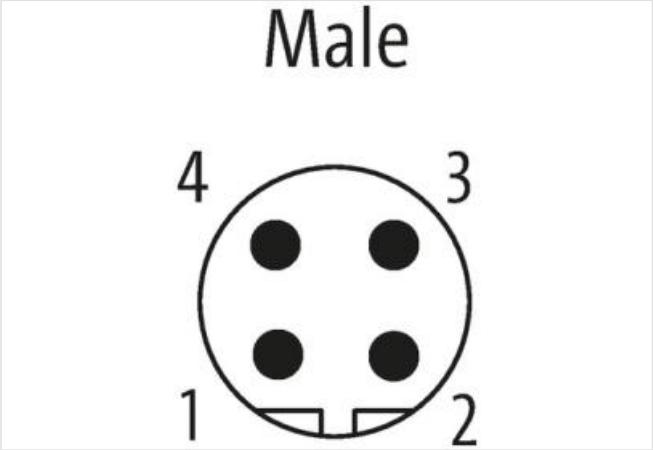

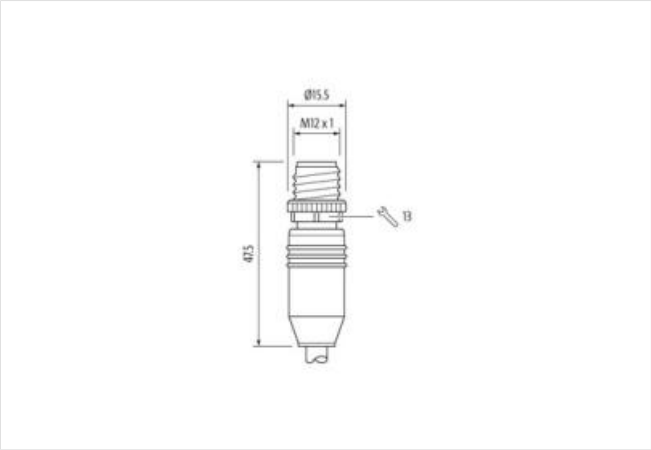

Product may differ from Image

Cable length	8,5 m

Side 1

このデータシートに含まれる情報は最大限の注意を払って作成されました。
Liability for the correctness completeness and topicality of the information is restricted to gross negligence. Version: 2024-04-26

Tightening torque	0,6 Nm
Mounting method	inserted, screwed
Family construction form	M12
Thread	M12 x 1
Coding	B
Material	PUR
Width across flats	SW13
Degree of protection (EN IEC 60529)	IP65, IP66K, IP67
Side 2	
Stripping length (jacket)	20 mm
取引条件	
ECLASS-6.0	27061801
ECLASS-6.1	27060307
ECLASS-7.0	27060307
ECLASS-8.0	27060307
ECLASS-9.0	27060307
ECLASS-10.1	27060307
ECLASS-11.1	27060307
ECLASS-12.0	27060307
ETIM-5.0	EC001855
GTIN	4048879384452
HSコード	85444290
Packaging unit	1
Electrical data | Supply	
Operating voltage AC max.	60 V
Operating voltage DC max.	60 V
Operating voltage AC (UL-listed)	30 V
Operating voltage DC (UL-listed)	30 V
Current operating per contact max.	4 A
Installation | Connection	
Stripping length (jacket)	20 mm
Mounting set	M12 x 1
Device protection | Electrical	
Additional condition protection degree	inserted, screwed
Pollution Degree	3
Rated surge voltage	1,5 kV
Material group (IEC 60664-1)	I
Mechanical data	
Contour for corrugated hose	without
Mechanical data | Material data	
Coating locking	Nickeled
Coating of fitting	nickel plated
Locking material	Zinc die-casting
Material screw connection	Zinc die-casting
Mechanical data | Mounting data	
Mounting method	inserted, screwed, Shaking protection
Environmental characteristics | Climatic	
Operating temperature min.	-25 °C
Operating temperature max.	85 °C
Additional condition temperature range	depending on cable quality

このデータシートに含まれる情報は最大限の注意を払って作成されました。
Liability for the correctness completeness and topicality of the information is restricted to gross negligence. Version: 2024-04-26

MURR ELEKTRONIK
stay connected

Conformity	
Product standard	DIN EN 61076-2-101 (M12)
Installation | Cable	
Cable identification	840
Jacket Color	violet
Type of Certificate	cURus
Amount stranding	1
Stranding	2 wires twisted
Cable shielding (type)	copper braid, tinned
Cable shielding (coverage)	70 %
Banding	Fleece, Foil
wire arrangement	red, green
No. of bending cycles (C-track)	5 Mio. @ 25 °C
Cable weigth	82,5 g/m
Material jacket	TPE-V
Freedom from ingredients (jacket)	lead-free, cadmium-free, CFC-free, halogen-free, silicone-free
Outer-diameter (jacket)	7,8 mm
Tolerance outer diameter (sheath)	± 5 %
Material inner jacket	TPE-V
Color (inner jacket)	white
Amount wires	2
Outer diameter insulation	2,55 mm
Outer diameter tolerance core insulation	± 5 %
Ingredient freeness wire insulation	lead-free, CFC-free, halogen-free
Amount strands (wire)	19
Diameter of single wires	24 AWG
Conductor crosssection (wire)	24 AWG
Material conductor wire	Stranded copper wire, bare
Traversing distance (C-track)	5 m @ 25 °C | horizontal
Current load capacity (standard)	to DIN VDE 0298-4
Current load capacity min. wire	3 A
Electrical resistance line constant wire	78 Ω/km @ 20 °C
Nominal voltage power AC max.	250 V
Electrical capacity line constant (wire - wire) (power)	30000 pF/km
AC withstand voltage power (wire - shield)	1 kV @ 60 s
Power frequency withstand voltage power (wire - jacket)	1 kV @ 60 s
AC withstand voltage power (wire - wire)	1 kV @ 60 s
Min. operating temperature (static)	-40 °C
Max. operating temperature (fixed)	80 °C
Operating temperature min. (dynamic)	-20 °C
Operating temperature max. (dynamic)	70 °C
Flame resistance	UL 1581 § 1100 FT2 | IEC 60332-2-2 | UL 1581 § 1090
chemical resistance	Good, application-related testing
Gasoline resistance	Good, application-related testing
Oil resistance	Good, application-related testing | DIN EN 60811-404
Bending radius (fixed)	10 x Outer diameter
Bending radius (dynamic)	12 x Outer diameter

このデータシートに含まれる情報は最大限の注意を払って作成されました。
Liability for the correctness completeness and topicality of the information is restricted to gross negligence. Version: 2024-04-26