MURR ELEKTRONIK
stay connected

MVK MPNIO DI16 galvanic separation

MVK PROFINET compact module, metal

Digital inputs
DI16 (IRT)
Ethernet 10/100 Mbit/s; M12, D-coded
7/8", 5-pole, max. 9 A, protection against reverse polarization
M12, 5-pole, A-coded
FSU (Fast-Start-Up)
Galvanic isolation
Connection cables are in the online shop under "Connection Technology".
Housing fully potted.

Link to Product

Illustration

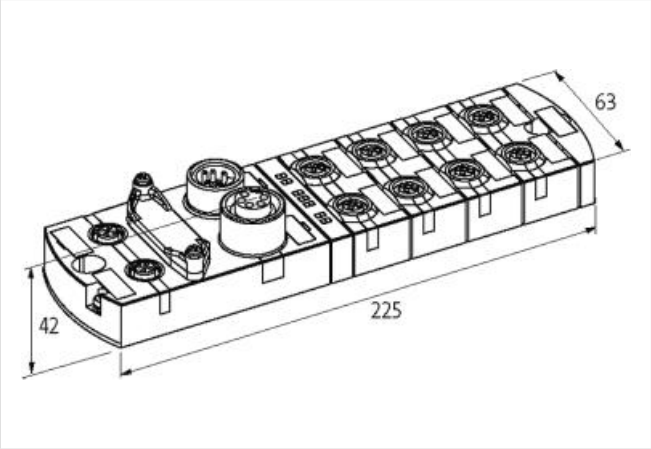

Product may differ from Image

取引条件

ECLASS-6.1	27242604
ECLASS-7.0	27242604
ECLASS-8.0	27242604
ECLASS-9.0	27242604
ECLASS-10.1	27242604
ECLASS-11.1	27242604
ECLASS-12.0	27242604
GTIN	4048879798976
HSコード	85389099
Packaging unit	1

Electrical data | Supply

Norm operating voltage	EN 61131-2
Operating voltage US DC	24 V
Total current UA max.	9 A
Total current US max.	9 A

Electrical data | Input

このデータシートに含まれる情報は最大限の注意を払って作成されました。
Liability for the correctness completeness and topicality of the information is restricted to gross negligence. Version: 2024-04-23

MURR ELEKTRONIK
stay connected

Overload resistant	yes
Short-circuit protected	yes
Type input	PNP, for 3-wire sensors or mechanical switches
Sensor current US per input max.	0,2 A
Industrial communication	
Supported protocol	PROFINET
Industrial communication | Profinet	
Number of active connections (IO controller) max.	2
FSU (Fast-Start-Up)	yes
Fast start up time max.	0,5 s
IRT (network communication)	yes
MRP client	yes
PROFINET Netload Class	III
PROFINET addressing	DCP
PROFINET conformance class	C
PROFINET specification	V2.3
Shared device/input	yes
Diagnostics	
Actuator warning	per channel via LED and BUS
Diagnostic	No voltage, Under voltage
Diagnostic via BUS	per module and channel
Diagnostic via LED	per module and channel
Short circuit diagnosis	yes
LED display	Ethernet connection/data traffic
Cable break	per port
Overload diagnosis	yes
Device protection | Electrical	
Degree of protection (EN IEC 60529)	IP67
Mechanical data | Mounting data	
Suitable for mounting type	2-hole screw mounting
Height	39 mm
Width	63 mm
Depth	225 mm
Environmental characteristics | Climatic	
Operating temperature min.	-25 °C
Operating temperature max.	55 °C
Storage temperature min.	-25 °C
Storage temperature max.	70 °C
Connection type 4	
Connection type 1	X0-X7
Connection type 2	XD1
Connection type 3	XD2
Connection type 4	XF1, XF2
Family construction form	M12
Gender	female
Color contact carrier	black
Coding	A
No. of poles	5
PIN 1	24 V DC (US)
PIN 2	DI
PIN 3	0 V (US)

このデータシートに含まれる情報は最大限の注意を払って作成されました。
Liability for the correctness completeness and topicality of the information is restricted to gross negligence. Version: 2024-04-23

PIN 4	DI
PIN 5	PE
Family construction form	7/8"
Gender	male
Color contact carrier	black
No. of poles	5
PIN 1	0 V (UA)
PIN 2	0 V (US)
PIN 3	PE
PIN 4	24 V DC (US)
PIN 5	24 V DC (UA)
Family construction form	7/8"
Gender	female
Color contact carrier	black
No. of poles	5
PIN 1	0 V (UA)
PIN 2	0 V (US)
PIN 3	PE
PIN 4	24 V DC (US)
PIN 5	24 V DC (UA)
Mounting method	inserted, screwed
Tightening torque	0,6 Nm
Family construction form	M12
Gender	female
Color contact carrier	black
Coding	D
No. of poles	4
PIN 1	TD +
PIN 2	RD +
PIN 3	TD -
PIN 4	RD -

このデータシートに含まれる情報は最大限の注意を払って作成されました。
Liability for the correctness completeness and topicality of the information is restricted to gross negligence. Version: 2024-04-23