MURR ELEKTRONIK
stay connected

UNIVERSAL CONTACTOR SUPPRESSOR

RC, 230VAC/DC/25VA/W

230 V AC/DC
RC
For other configurations and voltages, please inquire.
without accessories, can be directly snapped onto DIN-rail, ASA adapter Art.-No. 20900 included.
ASA adapter Art.-No. 20900 (included)

Link to Product

Illustration

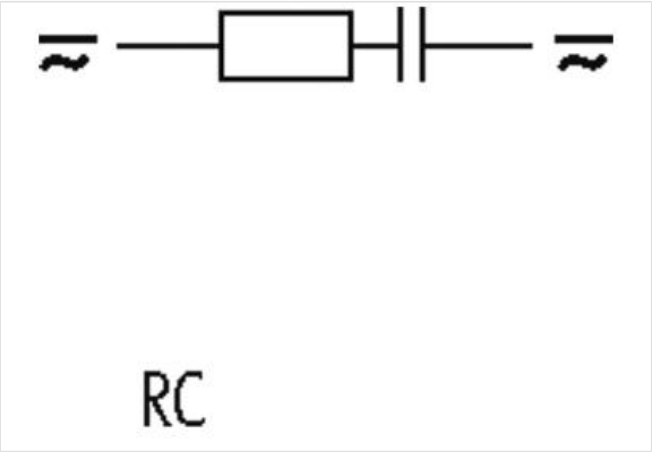

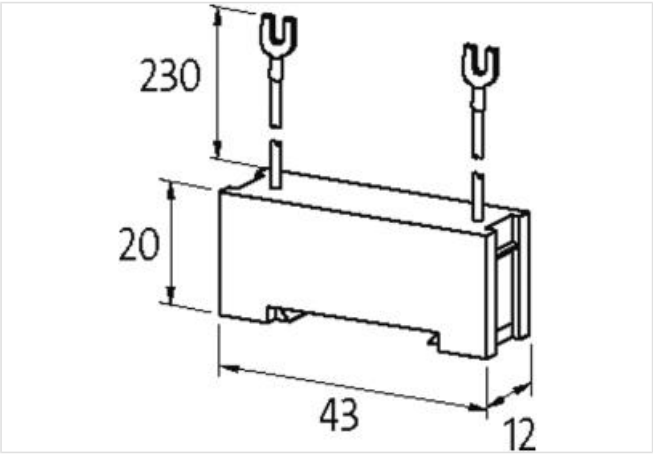

Product may differ from Image

取引条件

ECLASS-6.0	27371013
ECLASS-6.1	27371013
ECLASS-7.0	27371013
ECLASS-8.0	27371013
ECLASS-9.0	27371013

このデータシートに含まれる情報は最大限の注意を払って作成されました。
Liability for the correctness completeness and topicality of the information is restricted to gross negligence. Version: 2024-04-23

ECLASS-10.1	27371013
ECLASS-11.1	27371013
ECLASS-12.0	27371013
ETIM-5.0	EC002498
GTIN	4048879020596
HSコード	85363010
Packaging unit	1
Compatibility | Compatible with	
Appropriate contactors	universal
Electrical data	
Holding power max.	25 W
Electrical data | Input	
Input voltage AC min.	110 V
Input voltage AC max.	253 V
Input voltage DC min.	110 V
Input voltage DC max.	253 V
Mechanical data | Mounting data	
Height	20 mm
Width	43 mm
Depth	12 mm
Environmental characteristics | Climatic	
Operating temperature min.	-20 °C
Operating temperature max.	70 °C

このデータシートに含まれる情報は最大限の注意を払って作成されました。
Liability for the correctness completeness and topicality of the information is restricted to gross negligence. Version: 2024-04-23