M8 male 0° / M12 female 0° A-cod.

PUR 3x0.25 gy UL/CSA 4.5m

⚠ NOTICE ⚠
PRODUCT IS DISCONTINUED. PLEASE HAVE A LOOK AT THE ALTERNATIVE PRODUCTS.

Male straight – female straight
M8 – M12, 3-pole
Art-No. 7005 - M12/M8 Lite - (plastic hexagonal screw) on request
Further cable lengths on request.
Plastic housings with good resistance against chemicals and oils.
The resistance to aggressive media should be individually tested for your application. Further details on request.

Ürün Linki

örnekleme

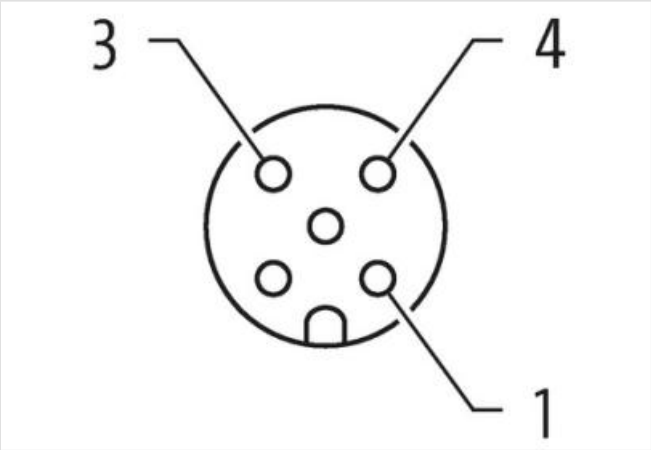

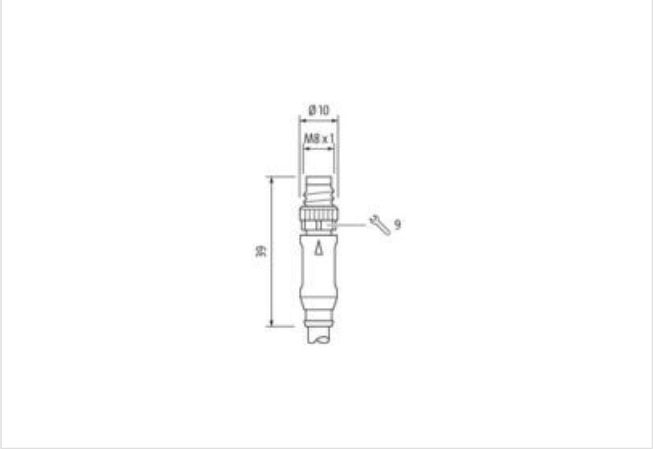

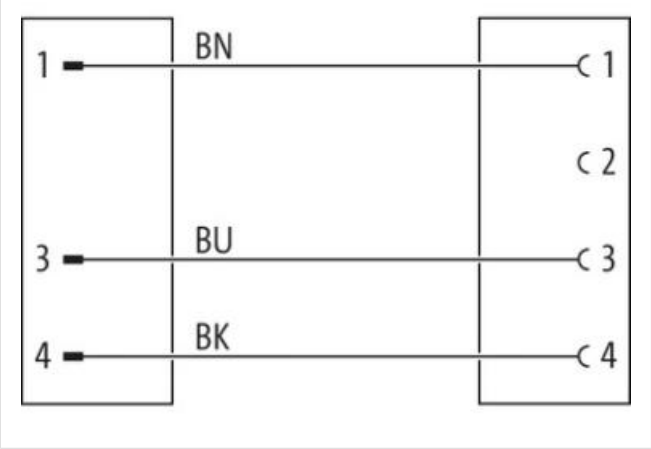

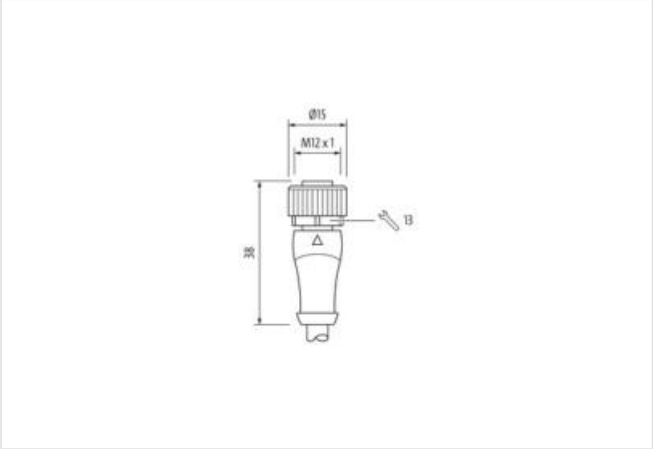

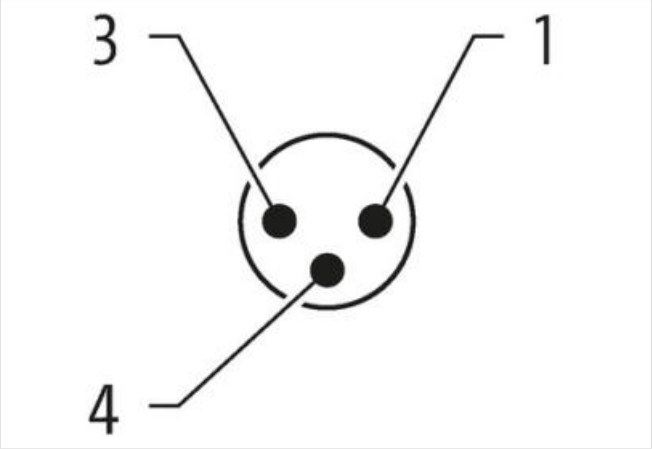

Ürün Image farklı olabilir

Cable length	4,5 m
Side 1	
Tightening torque	0,4 Nm
Mounting method	inserted, screwed
Coating contact	gold plated
Family construction form	M8
Thread	M8 x 1
suitable for corrugated tube (internal Ø)	6,5 mm
Coding	A
Material contact	Copper alloy
No. of poles	3
Width across flats	SW9
Side 2	
Tightening torque	0,6 Nm
Mounting method	inserted, screwed
Coating contact	gold plated
Family construction form	M12
Thread	M12 x 1
suitable for corrugated tube (internal Ø)	10 mm
Coding	A
Material contact	Copper alloy
No. of poles	3
Width across flats	SW13
Ticari bilgiler	
ECLASS-6.0	27061801
ECLASS-6.1	27279218
ECLASS-7.0	27279218
ECLASS-8.0	27279218
ECLASS-9.0	27060311
ECLASS-10.1	27060311
ECLASS-11.1	27060311
ECLASS-12.0	27060311

Bu veri sayfasındaki bilgiler en büyük özenle hazırlandı.
Bilgilerin doğruluğu bütünlüğü ve güncelliği konusunda yükümlülük ihmali sınırlıdır. Sürüm: 2024-04-26

ETIM-5.0	EC001855
GTIN	4048879817738
Gümrük tarife no (gtip)	85444290
Paket miktarı	1
Electrical data | Supply	
Operating voltage AC max.	50 V
Operating voltage DC max.	60 V
Operating voltage AC (UL-listed)	30 V
Operating voltage DC (UL-listed)	30 V
Current operating per contact max.	4 A
Device protection | Electrical	
Degree of protection (EN IEC 60529)	IP65, IP67, IP68, IP66K
Additional condition protection degree	inserted, screwed
Pollution Degree	3
Rated surge voltage	1,5 kV
Material group (IEC 60664-1)	I
Mechanical data | Material data	
Coating locking	Nickeled
Material gasket	FKM
Material housing	PUR
Locking material	Zinc die-casting
Mechanical data | Mounting data	
Mounting method	inserted, screwed, Shaking protection
Environmental characteristics | Climatic	
Operating temperature min.	-25 °C
Operating temperature max.	85 °C
Additional condition temperature range	depending on cable quality
Conformity	
Product standard	DIN EN 61076-2-101 (M12), DIN EN 61076-2-114 (M8)
Installation | Cable	
Cable identification	220
Cable Type	2
Jacket Color	gray
Type of Certificate	cURus
Amount stranding	1
Stranding	3 wires twisted
wire arrangement	brown, black, blue
No. of bending cycles (C-track)	2 Mio. @ 25 °C
Cable weigth	26,62 g/m
Material jacket	PUR
Shore hardness jacket	85 ± 5 Shore A
Freedom from ingredients (jacket)	lead-free, cadmium-free, CFC-free, silicone-free
Outer-diameter (jacket)	4,3 mm
Tolerance outer diameter (sheath)	± 5 %
Material wire insulation	PVC
Amount wires	3
Outer diameter insulation	1,25 mm
Outer diameter tolerance core insulation	± 5 %
Shore hardness wire insulation	43 ± 5 Shore D
Material properties wire insulation	good machinability
Ingredient freeness wire insulation	lead-free, cadmium-free, CFC-free, silicone-free

Bu veri sayfasındaki bilgiler en büyük özenle hazırlandı.
Bilgilerin doğruluğu bütünlüğü ve güncelliği konusunda yükümlülük ihmali sınırlıdır. Sürüm: 2024-04-26

Amount strands (wire)	32
Diameter of single wires	0,1 mm
Conductor crosssection (wire)	0,25 mm²
Material conductor wire	Stranded copper wire, bare
Conductor type (wire)	strand class 6
Traversing distance (C-track)	5 m @ 25 °C | horizontal
Current load capacity (standard)	to DIN VDE 0298-4
Current load capacity min. wire	4,5 A
Electrical resistance line constant wire	79 Ω/km @ 20 °C
Nominal voltage power AC max.	300 V
Power frequency withstand voltage power (wire - jacket)	2 kV @ 60 s
AC withstand voltage power (wire - wire)	2 kV @ 60 s
Min. operating temperature (static)	-30 °C
Max. operating temperature (fixed)	80 °C
Operating temperature min. (dynamic)	-5 °C
Operating temperature max. (dynamic)	80 °C
Flame resistance	UL 1581 § 1090 | IEC 60332-2-2 | UL 1581 § 1100 FT2
chemical resistance	Good, application-related testing
Gasoline resistance	Good, application-related testing
Oil resistance	DIN EN 60811-404 | Good, application-related testing
Bending radius (fixed)	10 x Outer diameter
Bending radius (dynamic)	15 x Outer diameter

Bu veri sayfasındaki bilgiler en büyük özenle hazırlandı.
Bilgilerin doğruluğu bütünlüğü ve güncelliği konusunda yükümlülük ihmali sınırlıdır. Sürüm: 2024-04-26