M12 male 90° / M12 female 90° A-cod.

PUR 5x0.34 bk UL/CSA+drag ch. 5m

Male 90° – female 90°
M12 – M12, 5-pole
Art-No. 7005 - M12 Lite - (plastic hexagonal screw) on request
Plastic housings with good resistance against chemicals and oils.
The resistance to aggressive media should be individually tested for your application. Further details on request.
Further cable lengths on request.

Ürün Linki

örnekleme

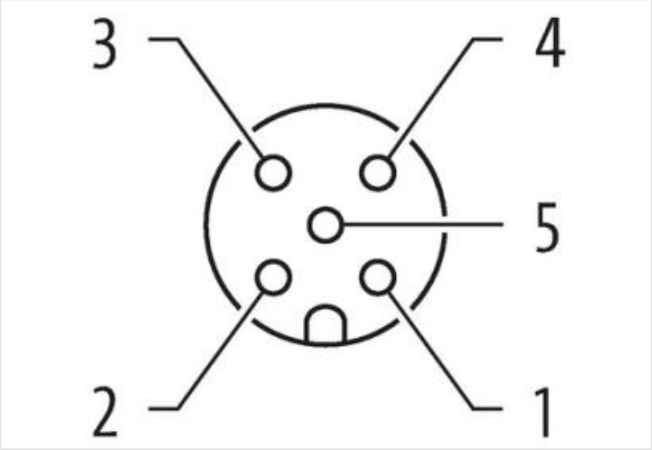

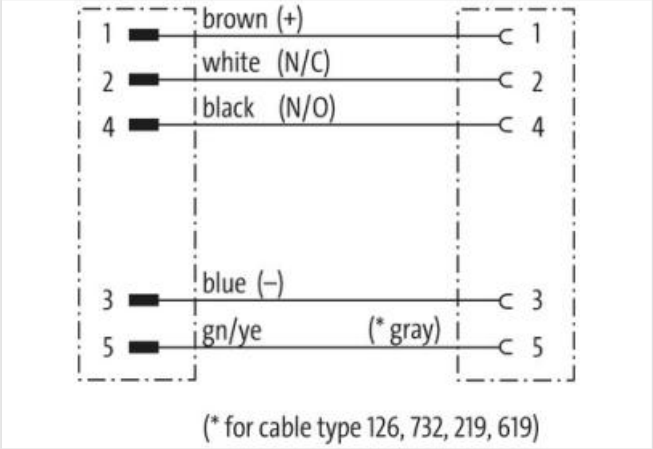

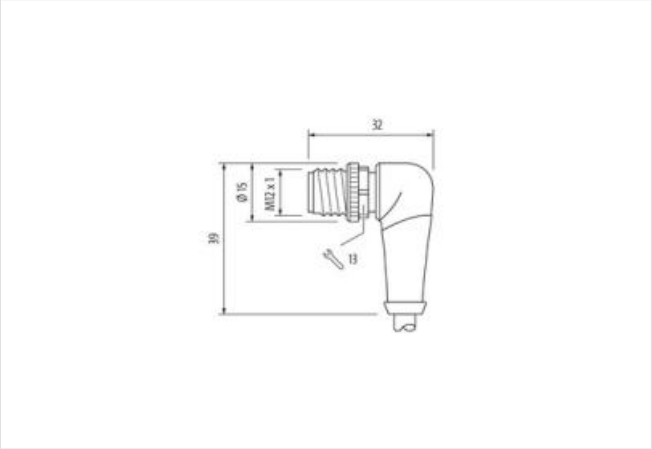

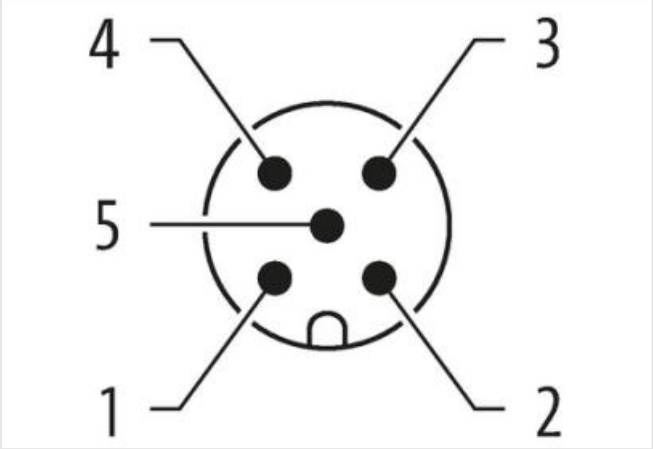

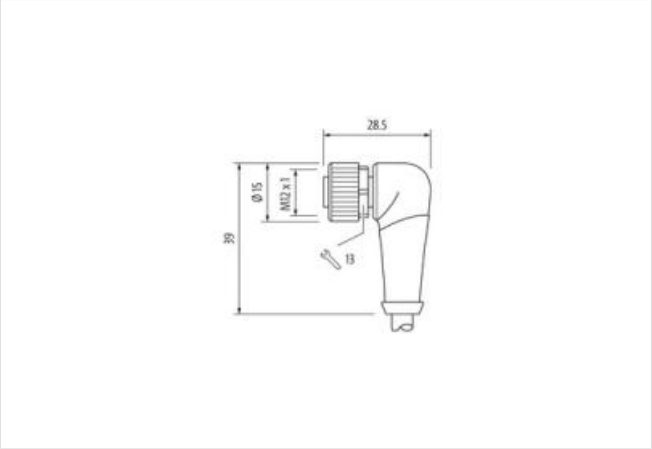

Ürün Image farklı olabilir

Cable length	5 m
Side 1	
Tightening torque	0,6 Nm
Mounting method	inserted, screwed
Family construction form	M12
Thread	M12 x 1
suitable for corrugated tube (internal Ø)	10 mm
Coding	A
Material	PUR
Width across flats	SW13
Degree of protection (EN IEC 60529)	IP66K, IP67
Side 2	
Tightening torque	0,6 Nm
Mounting method	inserted, screwed
Family construction form	M12
Thread	M12 x 1
suitable for corrugated tube (internal Ø)	10 mm
Coding	A
Material	PUR
Width across flats	SW13
Degree of protection (EN IEC 60529)	IP66K, IP67
Ticari bilgiler	
ECLASS-6.0	27279218
ECLASS-7.0	27279218
ECLASS-8.0	27279218
ECLASS-9.0	27060311
ECLASS-10.1	27060311
ECLASS-11.1	27060311
ECLASS-12.0	27060311
ETIM-5.0	EC001855
GTIN	4048879815673
Gümrük tarife no (gtip)	85444290
Paket miktarı	1

Bu veri sayfasındaki bilgiler en büyük özenle hazırlandı.
Bilgilerin doğruluğu bütünlüğü ve güncelliği konusunda yükümlülük ihmali sınırlıdır. Sürüm: 2024-04-27

Electrical data | Supply	
Operating voltage AC max.	125 V
Operating voltage DC max.	125 V
Operating voltage AC (UL-listed)	30 V
Operating voltage DC (UL-listed)	30 V
Current operating per contact max.	4 A
Installation | Connection	
Mounting set	M12 x 1
Device protection | Electrical	
Additional condition protection degree	inserted, screwed
Pollution Degree	3
Material group (IEC 60664-1)	I
Mechanical data | Material data	
Coating locking	Nickeled
Coating of fitting	nickel plated
Locking material	Zinc die-casting
Material screw connection	Zinc die-casting
Mechanical data | Mounting data	
Mounting method	inserted, screwed, Shaking protection
Environmental characteristics | Climatic	
Operating temperature min.	-25 °C
Operating temperature max.	85 °C
Additional condition temperature range	depending on cable quality
Installation | Cable	
Cable identification	732
Cable Type	3
Jacket Color	black
Type of Certificate	cURus
Amount stranding	1
Stranding	5 wires around Core filler twisted
Filler	yes
wire arrangement	brown, black, blue, white, gray
No. of bending cycles (C-track)	10 Mio. @ 25 °C
Cable weigth	41,8 g/m
Material jacket	PUR
Shore hardness jacket	90 ± 5 Shore A
Freedom from ingredients (jacket)	lead-free, cadmium-free, CFC-free, halogen-free, silicone-free
Outer-diameter (jacket)	4,8 mm
Tolerance outer diameter (sheath)	± 5 %
Material wire insulation	PP
Amount wires	5
Outer diameter insulation	1,25 mm
Outer diameter tolerance core insulation	± 5 %
Shore hardness wire insulation	70 ± 5 Shore D
Ingredient freeness wire insulation	lead-free, cadmium-free, CFC-free, halogen-free, silicone-free
Amount strands (wire)	42
Diameter of single wires	0,1 mm
Conductor crosssection (wire)	0,34 mm²
Material conductor wire	Stranded copper wire, bare
Conductor type (wire)	strand class 6
Traversing distance (C-track)	10 m @ 25 °C | horizontal

Bu veri sayfasındaki bilgiler en büyük özenle hazırlandı.
Bilgilerin doğruluğu bütünlüğü ve güncelliği konusunda yükümlülük ihmali sınırlıdır. Sürüm: 2024-04-27

Current load capacity (standard)	to DIN VDE 0298-4
Current load capacity min. wire	4,5 A
Electrical resistance line constant wire	57 Ω/km @ 20 °C
Nominal voltage power AC max.	300 V
Power frequency withstand voltage power (wire - jacket)	2,5 kV @ 60 s
AC withstand voltage power (wire - wire)	2,5 kV @ 60 s
Min. operating temperature (static)	-40 °C
Max. operating temperature (fixed)	80 °C / 90 °C @ 10000 h Operation
Operating temperature min. (dynamic)	-25 °C
Operating temperature max. (dynamic)	80 °C / 90 °C @ 10000 h Operation
UV resistance	DIN EN ISO 4892-2 A
Flame resistance	UL 1581 § 1090 | UL 1581 § 1100 FT2 | IEC 60332-2-2
chemical resistance	Good, application-related testing
Gasoline resistance	Good, application-related testing
Oil resistance	DIN EN 60811-404 | Good, application-related testing
Bending radius (fixed)	5 x Outer diameter
Bending radius (dynamic)	10 x Outer diameter
No. of torsion cycles	2 Mio.
Torsion speed	35 cycles/min
Torsion stress	± 180 °/m

Bu veri sayfasındaki bilgiler en büyük özenle hazırlandı.
Bilgilerin doğruluğu bütünlüğü ve güncelliği konusunda yükümlülük ihmali sınırlıdır. Sürüm: 2024-04-27