MURR ELEKTRONIK
stay connected

M12 female 0° A-cod. with cable

PUR 3x0.34 bk UL/CSA 7.5m

⚠ NOTICE ⚠
PRODUCT IS DISCONTINUED. PLEASE HAVE A LOOK AT THE ALTERNATIVE PRODUCTS.

Female straight
M12, 4-pole
Art-No. 7005 - M12 Lite - (plastic hexagonal screw) on request
with cable sleeves
Plastic housings with good resistance against chemicals and oils.
The resistance to aggressive media should be individually tested for your application. Further details on request.
Further cable lengths on request.

Ürün Linki

örnekleme

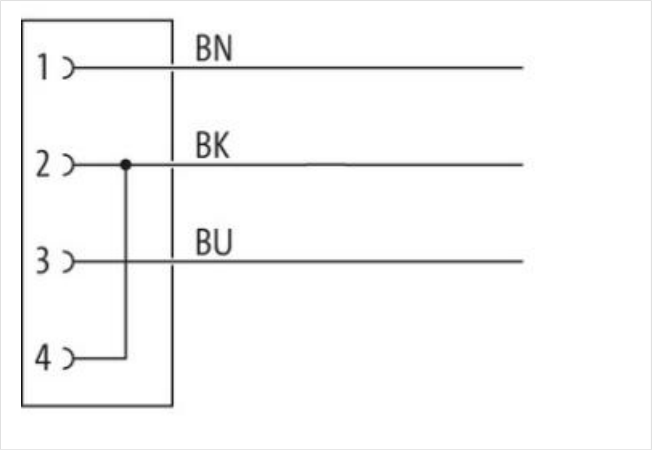

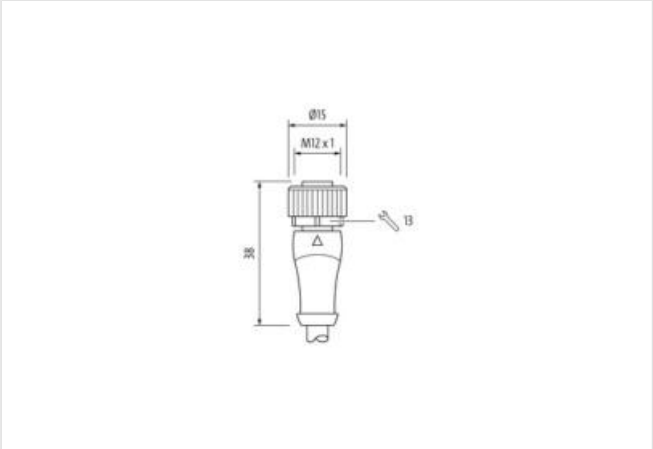

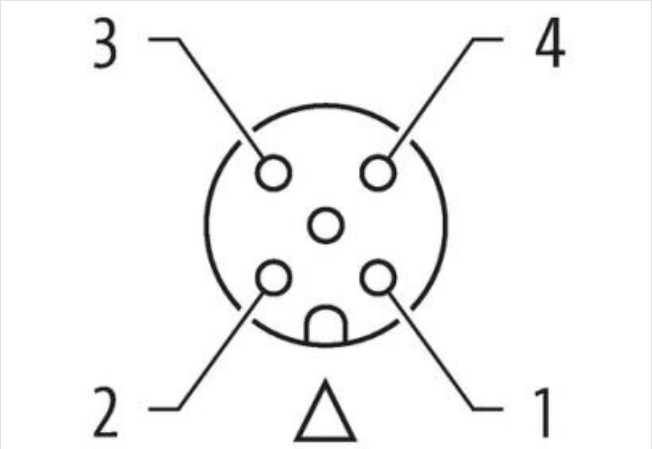

Ürün Image farklı olabilir

Cable length	7,5 m
Side 1	
Tightening torque	0,6 Nm
Mounting method	inserted, screwed
Coating contact	gold plated
Family construction form	M12
Thread	M12 x 1
suitable for corrugated tube (internal Ø)	10 mm
Coding	A
Material contact	Copper alloy
Material	PUR
No. of poles	4
Width across flats	SW13
Degree of protection (EN IEC 60529)	IP65, IP66K, IP67
Side 2	
Stripping length (jacket)	20 mm
Coating contact	gold plated
Ticari bilgiler	
ECLASS-6.0	27279218
ECLASS-6.1	27279218
ECLASS-7.0	27279218
ECLASS-8.0	27279218
ECLASS-9.0	27060311
ECLASS-10.1	27060311
ECLASS-11.1	27060311
ECLASS-12.0	27060311
ETIM-5.0	EC001855
GTIN	4048879456296
Gümrük tarife no (gtip)	85444290
Paket miktarı	1
Electrical data | Supply	
Operating voltage AC max.	250 V
Operating voltage DC max.	250 V
Operating voltage AC (UL-listed)	30 V
Operating voltage DC (UL-listed)	30 V
Current operating per contact max.	4 A
Diagnostics	
Status indication LED	no
Installation | Connection	
Stripping length (jacket)	20 mm
Mounting set	M12 x 1
Device protection | Electrical	
Additional condition protection degree	inserted, screwed
Pollution Degree	3
Rated surge voltage	2,5 kV
Material group (IEC 60664-1)	I
Mechanical data | Material data	
Coating locking	Nickeled
Coating of fitting	nickel plated
Material gasket	FKM
Locking material	Zinc die-casting

Murrelektronik GmbH | Falkenstraße 3 | 71570 Oppenweiler | Fon +49 (71 91) 47-0 | Fax +49 (71 91) 47-491000 | shop@murrelektronik.com | shop.murrelektronik.com

Material screw connection	Zinc die-casting
Mechanical data | Mounting data	
Mounting method	inserted, screwed, Shaking protection
Environmental characteristics | Climatic	
Operating temperature min.	-25 °C
Operating temperature max.	85 °C
Additional condition temperature range	depending on cable quality
Conformity	
Product standard	DIN EN 61076-2-101 (M12)
Cable	
Cable identification	623
Cable Type	2 (PUR/PVC)
Approval (cable)	UL (AWM-Style 20549/1731), CSA; CE conform
Cable weight [g/m]	35,97 g
Material wire	Cu wire, bare
Resistor (core)	max. 57 Ω/km (20 °C)
Single wire Ø (core)	0.1 mm
Construction (core)	42× 0.1 mm (multi-strand wire class 6)
Diameter (core)	3× 0.34 mm²
AWG	similar to AWG 22
Material wire isolation	PVC
Material property wire insulation	CFC-, cadmium-, silicone- and lead-free
Shore hardness wire isolation	43 ±5 D
Wire-Ø incl. isolation	1.25 mm ±5%
Color/numbering of wires	black similar to RAL 9005
Stranding combination	3 wires twisted
Shield	no
Material jacket	PUR/PVC
Material property (jacket)	CFC-, halogen-, cadmium-, silicone- and lead-free, matt, low-adhesion, machine easy to process, abrasion-resistant, hydrolysis and microbial resistant
Shore hardness jacket	80 ±5 A (PVC-under jacket); 85 ±5 A (PUR-jacket)
Outer-Ø (jacket)	4.3 mm ±5%
Color jacket	black
chemical resistance	good resistance to oil, gasoline and chemicals
Nominal voltage	UL 300 V AC
Test voltage	2000 V AC
Current load capacity	to DIN VDE 0298-4
Temperature range (fixed)	-30...+80 °C
Temperature range (mobile)	-5...+80 °C
Bending radius (fixed)	10× outer Ø
Bending radius (dynamic)	15× outer Ø
No. of bending cycles (C-track)	max. 2 Mio. (25 °C)
Travel speed (C-track)	max. 3.3 m/s
Acceleration (C-track)	max. 5 m/s²

Bu veri sayfasındaki bilgiler en büyük özenle hazırlandı.
Bilgilerin doğruluğu bütünlüğü ve güncelliği konusunda yükümlülük ihmali sınırlıdır. Sürüm: 2024-04-24