MURR ELEKTRONIK
stay connected

MVK-MPNIO DIO8 (DI8)

Use only as spare part! newer version! – contact Murrelektronik

Digital inputs/outputs
DIO8 DI8
Ethernet 10/100 Mbit/s; M12, D-coded
7/8", 5-pole, 2× max. 9 A
M12, 5-pole, A-coded
Connection cables are in the online shop under "Connection Technology".
Housing fully potted.

Ürün Linki

örnekleme

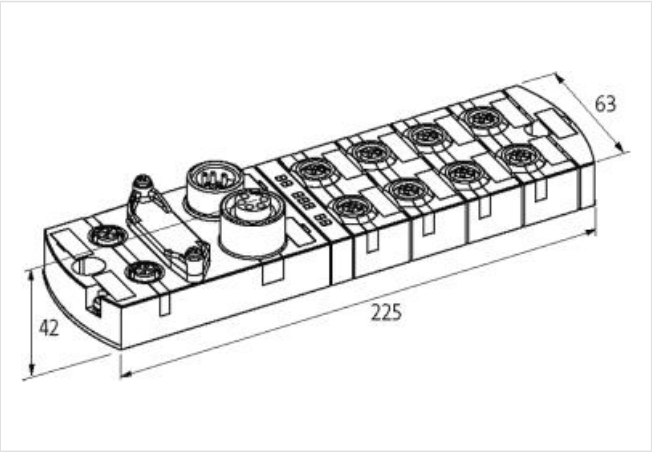

Ürün Image farklı olabilir

Ticari bilgiler

ECLASS-6.0	27242604
ECLASS-6.1	27242604
ECLASS-7.0	27242604
ECLASS-8.0	27242604
ECLASS-9.0	27242604
ECLASS-10.1	27242604
ECLASS-11.1	27242604
ECLASS-12.0	27242604
ETIM-5.0	EC001599
GTIN	4048879051637
Gümrük tarife no (gtip)	85176200
Paket miktarı	1

Electrical data | Supply

Norm operating voltage	EN 61131-2
Operating voltage US DC	24 V
Operating voltage UA DC	24 V
Total current UA max.	9 A
Total current US max.	9 A

Murrelektronik GmbH | Falkenstraße 3 | 71570 Oppenweiler | Fon +49 (71 91) 47-0 | Fax +49 (71 91) 47-491000 | shop@murrelektronik.com | shop.murrelektronik.com

Electrical data | Input	
Overload resistant	yes
Short-circuit protected	yes
Type input	PNP, for 3-wire sensors or mechanical switches
Sensor current US per input max.	0,2 A
Electrical data | Output	
Overload resistant	yes
Short-circuit protected	yes
Output current per pin max.	1,6 A
Lamp load	10 W
Industrial communication	
Supported protocol	PROFINET
Industrial communication | Profinet	
PROFINET addressing	DCP
PROFINET conformance class	B
PROFINET specification	V2.2
Diagnostics	
Actuator warning	per channel via LED and BUS
Diagnostic	No voltage, Under voltage
Diagnostic via BUS	per module and channel
Diagnostic via LED	per module and channel
Short circuit diagnosis	yes
LED display	Ethernet connection/data traffic
Cable break	per port
Overload diagnosis	yes
Device protection | Electrical	
Degree of protection (EN IEC 60529)	IP67
Mechanical data | Mounting data	
Suitable for mounting type	2-hole screw mounting
Height	42 mm
Width	63 mm
Depth	225 mm
Environmental characteristics | Climatic	
Operating temperature min.	-25 °C
Operating temperature max.	55 °C
Storage temperature min.	-25 °C
Storage temperature max.	70 °C
Connection type 5	
Connection type 1	0-3
Connection type 2	4-7
Connection type 3	Bus Out
Connection type 4	Power In
Connection type 5	Power Out
Family construction form	M12
Gender	female
Color contact carrier	black
Coding	A
No. of poles	5
PIN 1	24 V DC (US)
PIN 2	DI / Diag
PIN 3	0 V (US)

Bu veri sayfasındaki bilgiler en büyük özenle hazırlandı.
Bilgilerin doğruluğu bütünlüğü ve güncelliği konusunda yükümlülük ihmali sınırlıdır. Sürüm: 2024-04-20

PIN 4	DI
PIN 5	PE
Family construction form	M12
Gender	female
Color contact carrier	black
Coding	A
No. of poles	5
PIN 1	24 V DC (US)
PIN 2	DI / Diag
PIN 3	0 V (US)
PIN 4	DI / DO
PIN 5	PE
Mounting method	inserted, screwed
Tightening torque	0,6 Nm
Family construction form	M12
Gender	female
Color contact carrier	black
Coding	D
No. of poles	4
PIN 1	TD +
PIN 2	RD +
PIN 3	TD -
PIN 4	RD -
Family construction form	7/8"
Gender	male
Color contact carrier	black
No. of poles	5
PIN 1	0 V (UA)
PIN 2	0 V (US)
PIN 3	PE
PIN 4	24 V DC (US)
PIN 5	24 V DC (UA)
Family construction form	7/8"
Gender	female
Color contact carrier	black
No. of poles	5
PIN 1	0 V (UA)
PIN 2	0 V (US)
PIN 3	PE
PIN 4	24 V DC (US)
PIN 5	24 V DC (UA)

Murrelektronik GmbH | Falkenstraße 3 | 71570 Oppenweiler | Fon +49 (71 91) 47-0 | Fax +49 (71 91) 47-491000 | shop@murrelektronik.com | shop.murrelektronik.com