MURR ELEKTRONIK
stay connected

MEF EMC-FILTER 3-PHASE 1-STAGE

I:80A U:3x600 VAC book-style

Current: 80 A
1-stage
Attenuation curves on request.
The MEF 3/1-3/2 3-phase and 1-/2-stage mains suppression filters are used in the 0.1...30 MHz range to suppress conducted interference on mains and supply lines. They are suitable for TN-C networks. The best filter effect is achieved with short connecting lines (recommendation: PE connection < 10 cm) with the largest possible cross sections. Line suppression filters act bidirectionally (in both directions). They reduce symmetrical and asymmetrical interference, which often occurs with frequency converters and switched-mode power supplies.

Ürün Linki

örnekleme

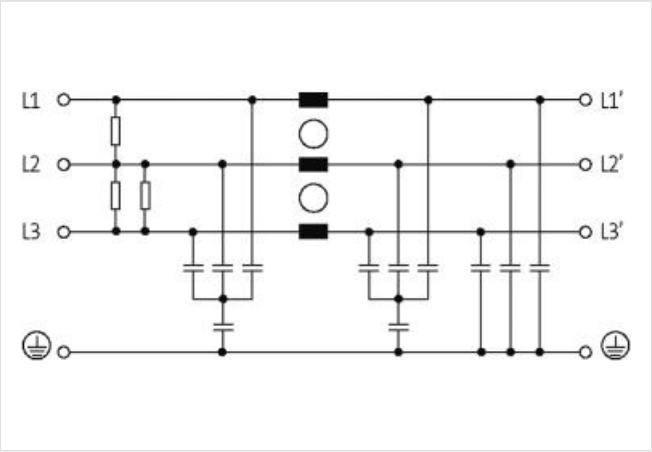

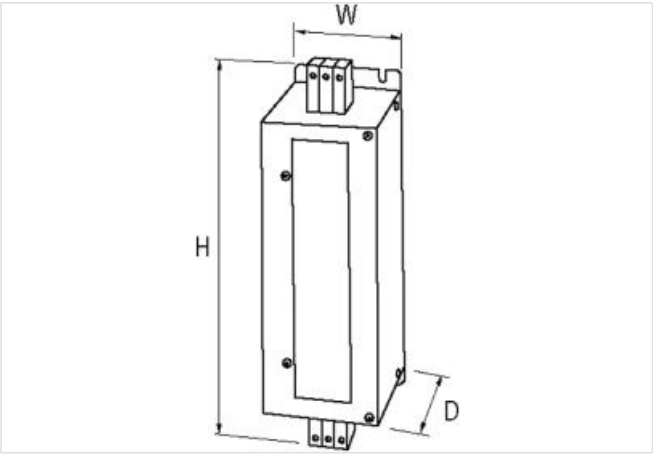

Ürün Image farklı olabilir

Ticari bilgiler

ECLASS-6.0	27130806
ECLASS-6.1	27420201

ECLASS-7.0	27420290
ECLASS-8.0	27420290
ECLASS-9.0	27420290
ECLASS-10.1	27420208
ECLASS-11.1	27420208
ECLASS-12.0	27420208
ETIM-5.0	EC002498
GTIN	4048879029209
Gümrük tarife no (gtip)	85363030
Paket miktarı	1
Electrical data	
Leakage current max.	10 mA @ 250 V AC, 50 Hz
Electrical data | Supply	
Power frequency	50 ... 60 Hz
Operating voltage AC max.	600 V
Electrical data | Input	
Phase number input	3
Electrical data | Output	
Overload current	18× (IN t) max. 0.5 ms; 1.5× (IN t) max. 1 min. (1× per hour)
Installation	
Connection cross-section solid min.	6 mm²
Connection cross-section solid max.	35 mm²
Connection cross-section stranded/fine-stranded min.	10 mm²
Connection cross-section stranded/fine-stranded max.	35 mm²
AWG number solid min.	9
AWG number solid max.	2
AWG number stranded/fine stranded min.	7
AWG number stranded/fine stranded max.	2
Device protection | Electrical	
Duration insulation test voltage	2 s
Insulation test voltage L-L	3,1 kV
Insulation test voltage L-N	3,3 kV
Mechanical data | Mounting data	
Mounting method	screwed
Height	270 mm
Width	90 mm
Depth	150 mm
Environmental characteristics | Climatic	
Climatic category (EN IEC 60068-1)	25/085/21
Connection type 2	
Connection	Screw terminals SK
Family construction form	terminal
Gender	female
Color contact carrier	gray
No. of poles	3
PIN 1	L 1
PIN 2	L 2
PIN 3	L 3
Connection	Screw terminals SK

Murrelektronik GmbH | Falkenstraße 3 | 71570 Oppenweiler | Fon +49 (71 91) 47-0 | Fax +49 (71 91) 47-491000 | shop@murrelektronik.com | shop.murrelektronik.com

Family construction form	terminal
Gender	female
Color contact carrier	gray
No. of poles	3
PIN 1	L 1'
PIN 2	L 2'
PIN 3	L 3'

Murrelektronik GmbH | Falkenstraße 3 | 71570 Oppenweiler | Fon +49 (71 91) 47-0 | Fax +49 (71 91) 47-491000 | shop@murrelektronik.com | shop.murrelektronik.com