MURR ELEKTRONIK
stay connected

M12 female 0° A-cod. IDC

3-pol., 0.5 - 1.0mm², 5,5 - 8mm

Female straight
M12, 3-pole
IDC terminals
Connection cross section: 0.5...1.0 mm²
Art-No. 7005 - M12 Lite - (plastic hexagonal screw) on request
Plastic housings with good resistance against chemicals and oils.
The resistance to aggressive media should be individually tested for your application. Further details on request.

제품 링크

일러스트

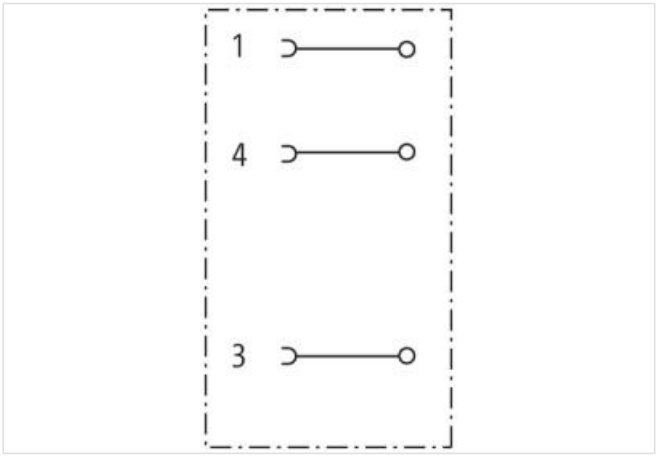

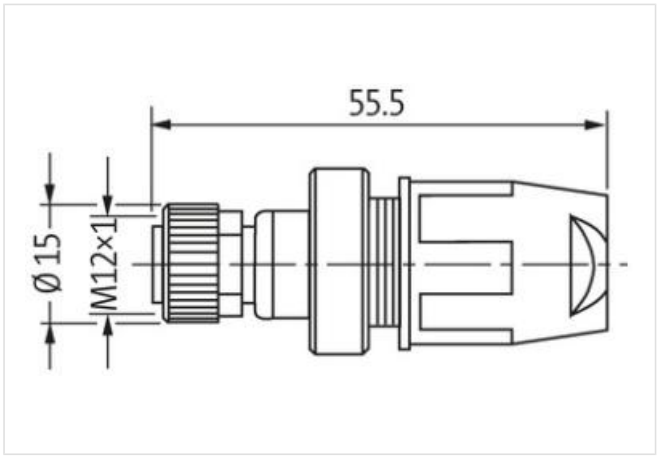

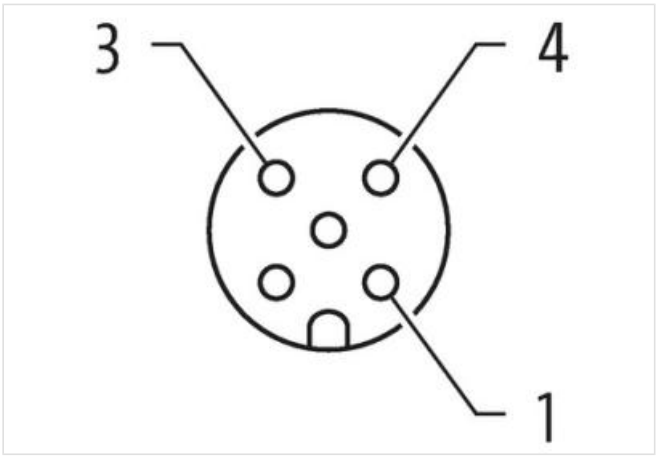

실제 제품은 이미지와 다를 수 있습니다.

Side 1	
Family construction form	M12
Degree of protection (EN IEC 60529)	IP67

제품자료	
ECLASS-6.0	27279221
ECLASS-7.0	27440104
ECLASS-8.0	27440104
ECLASS-9.0	27440102

Murrelektronik GmbH | Falkenstraße 3 | 71570 Oppenweiler | Fon +49 (71 91) 47-0 | Fax +49 (71 91) 47-491000 | shop@murrelektronik.com | shop.murrelektronik.com

MURR ELEKTRONIK
stay connected

ECLASS-10.1	27440102
ECLASS-11.1	27440102
ECLASS-12.0	27440116
ETIM-5.0	EC002635
GTIN	4048879201735
세번부호	85366990
포장단위	1
Electrical data | Supply	
Operating voltage AC max.	32 V
Operating voltage DC max.	32 V
Current operating per contact max.	4 A
Installation	
Connection cross section min.	0,5 mm²
Connection cross section max.	1 mm²
Single wire diameter min.	0,1 mm
Installation | Connection	
Wire insulation diameter min.	1,6 mm
Wire insulation diameter max.	2 mm
Tightening torque	0,6 Nm
Device protection | Electrical	
Additional condition protection degree	inserted, screwed
Mechanical data | Mounting data	
Mounting method	inserted, screwed, Shaking protection
Clamping range min.	5,5 mm
Clamping range max.	8 mm
Height	55 mm
Width	22 mm
Depth	22 mm
Environmental characteristics | Climatic	
Operating temperature min.	-25 °C
Operating temperature max.	85 °C

이 데이터 시트에 포함된 정보는 최대한의 주의로 작성되었습니다.

Murrelektronik GmbH | Falkenstraße 3 | 71570 Oppenweiler | Fon +49 (71 91) 47-0 | Fax +49 (71 91) 47-491000 | shop@murrelektronik.com | shop.murrelektronik.com