MURR ELEKTRONIK
stay connected

MSUD valve plug A-18mm with cable

PUR 3x0.75 gy UL/CSA 3m

MSUD
Form A (18 mm)
24 V DC ±25%
LED and suppression
Further cable lengths on request.
Plastic housings with good resistance against chemicals and oils.
The resistance to aggressive media should be individually tested for your application. Further details on request.

Link do produto

Ilustração

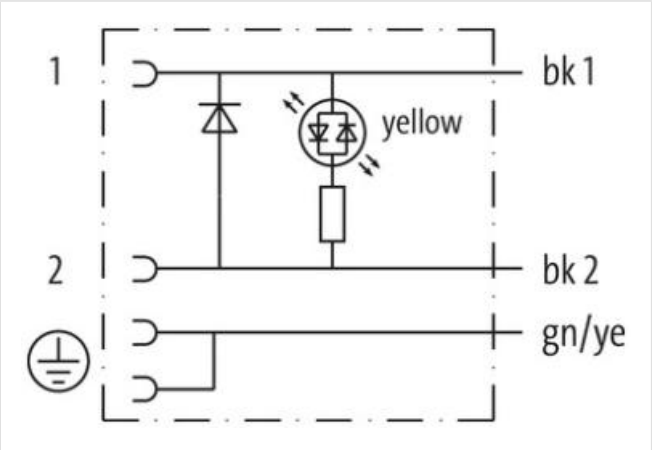

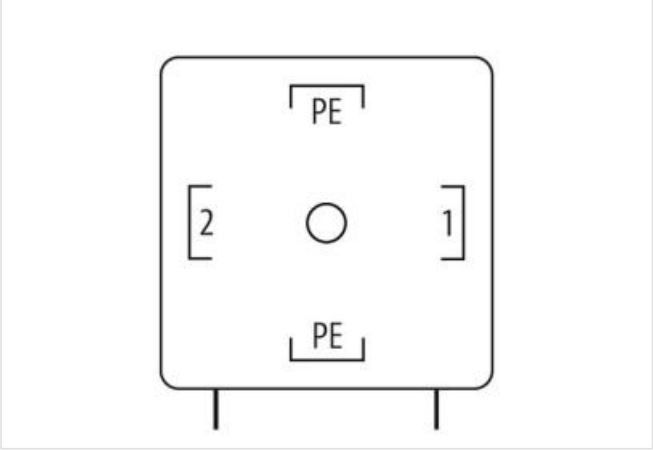

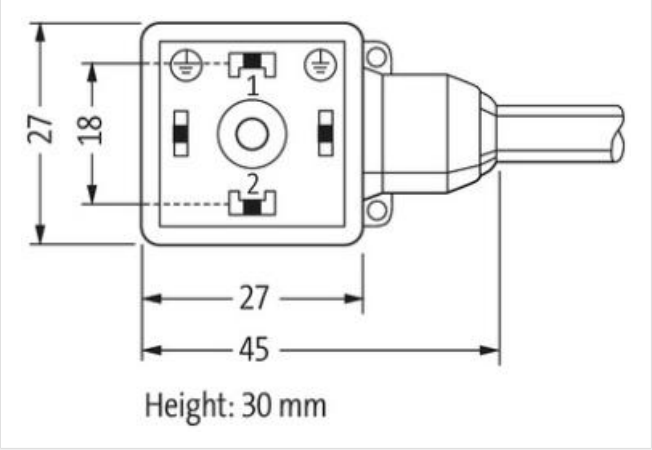

Produto pode diferir da imagem

Cable length	3 m
Side 1	
Tightening torque	0,4 Nm

As informações contidas nesta folha de dados foram elaboradas com o máximo cuidado.
A falta de integridade, exatidão e atualização das informações é considerada negligência grave. versão: 25/04/2024

Mounting method	inserted, screwed
Family construction form	MSUD A
Thread	M3
Material	PBT
Degree of protection (EN IEC 60529)	IP67
Dados comerciais	
ECLASS-6.0	27279218
ECLASS-7.0	27279218
ECLASS-8.0	27279218
ECLASS-9.0	27060311
ECLASS-10.1	27060312
ECLASS-11.1	27060312
ECLASS-12.0	27060312
ETIM-5.0	EC001855
Classificação fiscal	85444290
GTIN	4048879623810
Quantidade por embalagem	1
Electrical data | Supply	
Operating voltage DC	24 V
Operating voltage DC min.	18 V
Operating voltage DC max.	30 V
Current operating per contact max.	4 A
Diagnostics	
Status indication LED	yellow
Installation | Connection	
Mounting set	M3
Device protection | Electrical	
Additional condition protection degree	inserted, screwed
Pollution Degree	3
Rated surge voltage	0,8 kV
Material group (IEC 60664-1)	I
Mechanical data | Material data	
Coating of fitting	verzinkt
Color housing	black
Material screw connection	Steel
Mechanical data | Mounting data	
Mounting method	inserted, screwed
Environmental characteristics | Climatic	
Operating temperature min.	-25 °C
Operating temperature max.	85 °C
Additional condition temperature range	depending on cable quality
Installation | Cable	
Cable identification	226
Cable Type	2
Jacket Color	gray
Type of Certificate	cURus
Amount stranding	1
Stranding	3 wires twisted
wire arrangement	black 1, black 2, green-yellow
No. of bending cycles (C-track)	2 Mio. @ 25 °C

As informações contidas nesta folha de dados foram elaboradas com o máximo cuidado.
A falta de integridade, exatidão e atualização das informações é considerada negligência grave. versão: 25/04/2024

Cable weigth	55,33 g/m
Material jacket	PUR
Shore hardness jacket	85 ± 5 Shore A
Freedom from ingredients (jacket)	lead-free, cadmium-free, CFC-free, halogen-free, silicone-free
Outer-diameter (jacket)	5,9 mm
Tolerance outer diameter (sheath)	± 5 %
Material inner jacket	PVC
Material wire insulation	PVC
Amount wires	3
Outer diameter insulation	1,8 mm
Outer diameter tolerance core insulation	± 5 %
Shore hardness wire insulation	43 ± 5 Shore D
Ingredient freeness wire insulation	lead-free, cadmium-free, CFC-free, silicone-free
Amount strands (wire)	42
Diameter of single wires	0,15 mm
Conductor crosssection (wire)	0,75 mm²
Material conductor wire	Stranded copper wire, bare
Conductor type (wire)	strand class 6
Current load capacity (standard)	to DIN VDE 0298-4
Current load capacity min. wire	12 A
Electrical resistance line constant wire	26 Ω/km @ 20 °C
Nominal voltage power AC max.	300 V
Power frequency withstand voltage power (wire - jacket)	2 kV @ 60 s
AC withstand voltage power (wire - wire)	2 kV @ 60 s
Min. operating temperature (static)	-30 °C
Max. operating temperature (fixed)	80 °C
Operating temperature min. (dynamic)	-5 °C
Operating temperature max. (dynamic)	80 °C
UV resistance	DIN EN ISO 4892-2 A
Flame resistance	IEC 60332-2-2 | UL 1581 § 1090 | UL 1581 § 1100 FT2
chemical resistance	Good, application-related testing
Gasoline resistance	Good, application-related testing
Oil resistance	DIN EN 60811-404 | Good, application-related testing
Bending radius (fixed)	10 x Outer diameter
Bending radius (dynamic)	15 x Outer diameter

As informações contidas nesta folha de dados foram elaboradas com o máximo cuidado.
A falta de integridade, exatidão e atualização das informações é considerada negligência grave. versão: 25/04/2024