MURR ELEKTRONIK
stay connected

MASI68 AI4 RTD E 4XM12

AI4 - (E) RTD
4× M12
Connection cables are in the online shop under "Connection Technology".
Housing fully potted.

Link to Product

Illustration

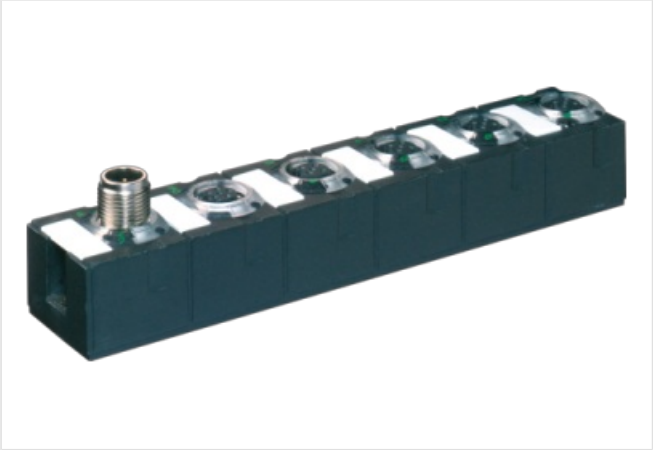

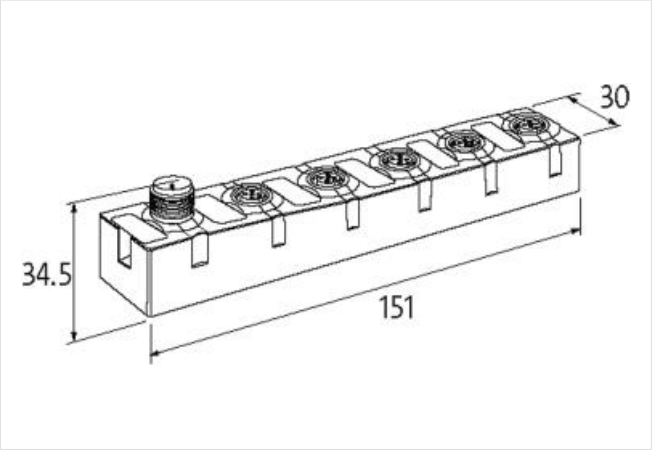

Product may differ from Image

Commercial data

ECLASS-6.0	27242601
ECLASS-6.1	27242601
ECLASS-7.0	27242601
ECLASS-8.0	27242601
ECLASS-9.0	27242601
ECLASS-10.1	27242601
ECLASS-11.1	27242601
ECLASS-12.0	27242601
ETIM-5.0	EC001596
customs tariff number	85176200
GTIN	4048879321280
Packaging unit	1

Electrical data | Supply

Bus voltage AS-Interface DC min.	26,5 V
Bus voltage AS-Interface DC max.	31,6 V
Current consumption AS-i port max.	100 mA

Electrical data | Input

Input current	1,25 mA
Sensor type	Pt100

Industrial communication | Bus data

Address setting type	M12 connection and programming device, Master

Industrial communication | AS-Interface

The information in this Product-PDF has been compiled with the utmost care.
Liability for the correctness completeness and topicality of the information is restricted to gross negligence. Version: 2024-04-25

Profile (IO.ID.ID2)	S-7.3.E
Diagnostics	
Actuator warning	no
Diagnostic	No voltage
Diagnostic via LED	per module
LED display	Ethernet connection/data traffic
Device protection | Electrical	
Degree of protection (EN IEC 60529)	IP68
Mechanical data | Mounting data	
Mounting method	screwed
Height	151 mm
Width	30 mm
Depth	34,5 mm
Environmental characteristics | Climatic	
Operating temperature min.	0 °C
Operating temperature max.	55 °C
Storage temperature min.	-40 °C
Storage temperature max.	85 °C
Connection type 3	
Connection type 1	0-3
Connection type 2	Bus In
Connection type 3	Bus Out
Family construction form	M12
Gender	female
Color contact carrier	black
Coding	A
No. of poles	5
PIN 1	CH +
PIN 2	CH S +
PIN 3	CH -
PIN 4	CH S -
PIN 5	n.c.
Family construction form	M12
Gender	male
Color contact carrier	black
Coding	A
No. of poles	4
PIN 1	AS-i +
PIN 2	0 V
PIN 3	AS-i -
PIN 4	24 V DC
Family construction form	M12
Gender	female
Color contact carrier	black
Coding	A
No. of poles	5
PIN 1	AS-i +
PIN 2	0 V
PIN 3	AS-i -
PIN 4	24 V DC
PIN 5	n.c.

The information in this Product-PDF has been compiled with the utmost care.
Liability for the correctness completeness and topicality of the information is restricted to gross negligence. Version: 2024-04-25