MURR ELEKTRONIK
stay connected

MASI68 I/O EXTENSION MODULE

8 digital inputs

Expansion module
DI8 - 0.19 A (E) - 8× M8 (AB)
Connection cables are in the online shop under "Connection Technology".
Housing fully potted.
Preset 1× address 31 A, 1× address 31 B

Link to Product

Illustration

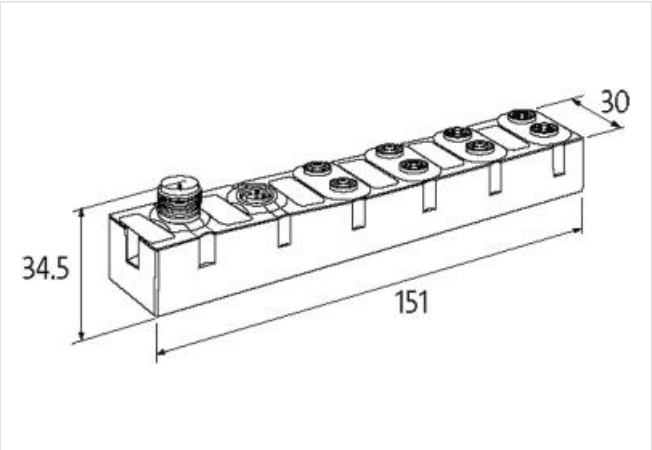

Product may differ from Image

Commercial data

ECLASS-6.0	27242604
ECLASS-6.1	27242604
ECLASS-7.0	27242604
ECLASS-8.0	27242604
ECLASS-9.0	27242604
ECLASS-10.1	27242604
ECLASS-11.1	27242604
ECLASS-12.0	27242604
ETIM-5.0	EC001599
customs tariff number	85176200
GTIN	4048879048811
Packaging unit	1

Electrical data | Supply

Bus voltage AS-Interface DC min.	26,5 V
Bus voltage AS-Interface DC max.	31,6 V
Current consumption AS-i port max.	300 mA

Electrical data | Input

Overload resistant	yes
Short-circuit protected	yes

The information in this Product-PDF has been compiled with the utmost care.
Liability for the correctness completeness and topicality of the information is restricted to gross negligence. Version: 2024-04-28

Type input	PNP, for 3-wire sensors or mechanical switches
Current carrying capacity max.	0,19 A
Industrial communication | Bus data	
Address setting type	M12 connection and programming device, Master
Slave address range	(0), 1 A...31 A, 1 B...31 B
Industrial communication | AS-Interface	
AS-i Power 24	yes
Profile (IO.ID.ID2)	2× S-0.A.E
Diagnostics	
Diagnostic	No voltage
Diagnostic via LED	per module
LED display	Ethernet connection/data traffic
Device protection | Electrical	
Degree of protection (EN IEC 60529)	IP68
Mechanical data | Mounting data	
Mounting method	screwed
Height	85 mm
Width	30 mm
Depth	34,5 mm
Environmental characteristics | Climatic	
Operating temperature min.	-20 °C
Operating temperature max.	60 °C
Storage temperature min.	-20 °C
Storage temperature max.	70 °C
Connection type 3	
Connection type 1	B D F H
Connection type 2	Bus In
Connection type 3	Bus Out
Family construction form	M8
Gender	female
Color contact carrier	black
Coding	A
No. of poles	3
PIN 1	Usens +
PIN 3	Usens -
PIN 4	DI
Family construction form	M12
Gender	male
Color contact carrier	black
Coding	A
No. of poles	4
PIN 1	AS-i +
PIN 2	0 V
PIN 3	AS-i -
PIN 4	24 V DC
Family construction form	M12
Gender	female
Color contact carrier	black
Coding	A
No. of poles	5
PIN 1	AS-i +

The information in this Product-PDF has been compiled with the utmost care.
Liability for the correctness completeness and topicality of the information is restricted to gross negligence. Version: 2024-04-28

PIN 2	0 V
PIN 3	AS-i -
PIN 4	24 V DC
PIN 5	n.c.

The information in this Product-PDF has been compiled with the utmost care.
Liability for the correctness completeness and topicality of the information is restricted to gross negligence. Version: 2024-04-28