MURR ELEKTRONIK
stay connected

MASI67 I/O MODULE

4 digital inputs

Digital inputs
DI4 - 0.2 A (AB) - 4× M12
Y-wiring
Connection cables are in the online shop under "Connection Technology".
Housing fully potted.

Link to Product

Illustration

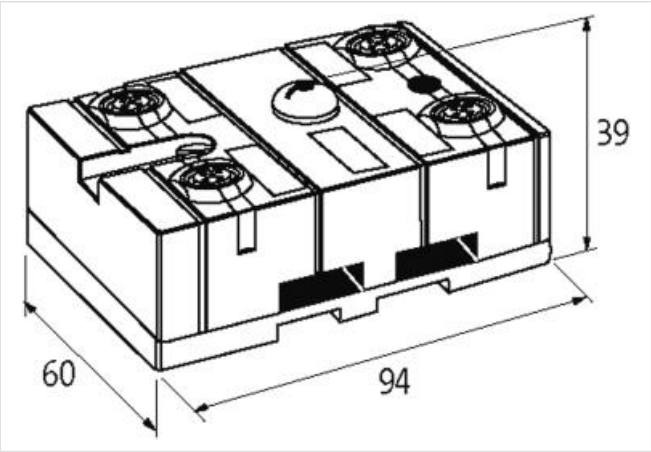

Product may differ from Image

Commercial data

ECLASS-6.0	27242604
ECLASS-6.1	27242604
ECLASS-7.0	27242604
ECLASS-8.0	27242604
ECLASS-9.0	27242604
ECLASS-10.1	27242604
ECLASS-11.1	27242604
ECLASS-12.0	27242604
ETIM-5.0	EC001599
customs tariff number	85176200
GTIN	4048879049009
Packaging unit	1

Electrical data

Y-wiring	yes

Electrical data | Supply

Bus voltage AS-Interface DC min.	26,5 V
Bus voltage AS-Interface DC max.	31,6 V
Current consumption AS-i port max.	250 mA

Electrical data | Input

The information in this Product-PDF has been compiled with the utmost care.
Liability for the correctness completeness and topicality of the information is restricted to gross negligence. Version: 2024-04-18

Overload resistant	yes
Short-circuit protected	yes
Type input	PNP, for 3-wire sensors or mechanical switches
Current carrying capacity max.	0,17 A
Industrial communication | Bus data	
Address setting type	Addressing socket, Master
Slave address range	(0), 1 A...31 A, 1 B...31 B
Industrial communication | AS-Interface	
Profile (IO.ID.ID2)	S-0.A.2
Diagnostics	
Diagnostic via BUS	yes
Diagnostic via LED	per module
LED display	Ethernet connection/data traffic
Device protection | Electrical	
Degree of protection (EN IEC 60529)	IP67
Mechanical data | Mounting data	
Mounting method	screwed, geschnappt
Suitable for mounting type	mounting rail, (EN 60715)
Height	94 mm
Width	60 mm
Depth	39 mm
Environmental characteristics | Climatic	
Operating temperature min.	-20 °C
Operating temperature max.	60 °C
Storage temperature min.	-20 °C
Storage temperature max.	70 °C
Connection type 2	
Connection type 1	2
Connection type 2	3
Family construction form	M12
Gender	female
Color contact carrier	black
Coding	A
No. of poles	5
PIN 1	Usens +
PIN 2	DI
PIN 3	Usens -
PIN 4	DI
PIN 5	n.c.
Family construction form	M12
Gender	female
Color contact carrier	black
Coding	A
No. of poles	5
PIN 1	Usens +
PIN 2	n.c.
PIN 3	Usens -
PIN 4	DI
PIN 5	n.c.

The information in this Product-PDF has been compiled with the utmost care.
Liability for the correctness completeness and topicality of the information is restricted to gross negligence. Version: 2024-04-18