MURR ELEKTRONIK
stay connected

MOTOR SUPPRESSOR

RC, 3x575VAC/20kW

3× 575 V AC
RC
Suppressors for other voltages, frequencies, and motor ratings available on request. Do not use RC motor suppressors with frequency inverters.

Link to Product

Illustration

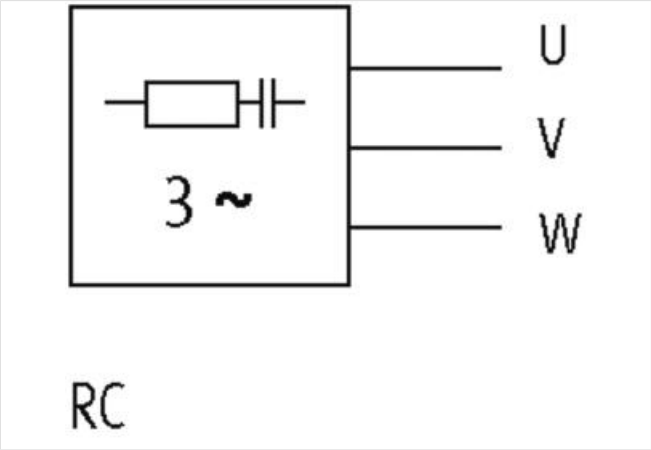

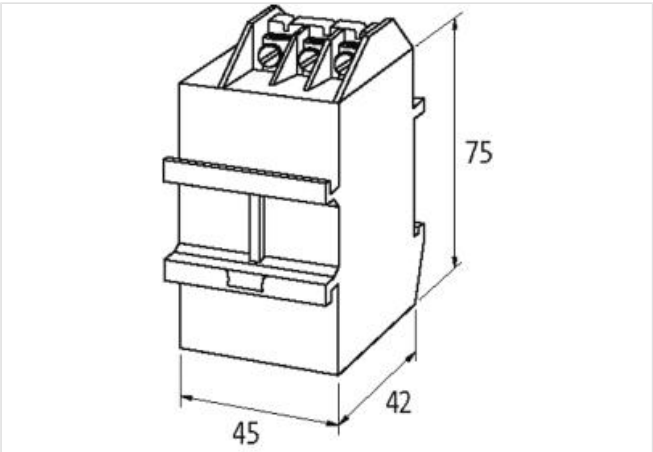

Product may differ from Image

Commercial data

ECLASS-6.0	27371013
ECLASS-6.1	27371013
ECLASS-7.0	27371013
ECLASS-8.0	27371013
ECLASS-9.0	27371013
ECLASS-10.1	27371013

The information in this Product-PDF has been compiled with the utmost care.
Liability for the correctness completeness and topicality of the information is restricted to gross negligence. Version: 2024-04-20

ECLASS-11.1	27371013
ECLASS-12.0	27371013
ETIM-5.0	EC000197
customs tariff number	85363010
GTIN	4048879019521
Packaging unit	1
Electrical data | Supply	
Power frequency	50 ... 60 Hz
Electrical data | Input	
Input voltage AC	575 V
Installation	
Connection cross-section solid min.	0,75 mm²
Connection cross-section solid max.	2,5 mm²
Installation | Connection	
Connection information	terminal
Family construction form	M4
Installation | Pin assignment	
No. of poles	3
Device protection | Media	
Flame resistance	flame retardant
Mechanical data | Material data	
Combustibility class housing (UL94)	V-0
Material housing	Plastic
Material potting compound	2-component epoxy
Mechanical data | Mounting data	
Height	75 mm
Width	45 mm
Depth	42 mm
Environmental characteristics | Climatic	
Operating temperature min.	-20 °C
Operating temperature max.	60 °C

The information in this Product-PDF has been compiled with the utmost care.
Liability for the correctness completeness and topicality of the information is restricted to gross negligence. Version: 2024-04-20